CONNECTICUT DEPARTMENT OF TRANSPORTATION

Plans For

REPLACEMENT OF OVERHEAD SIGN SUPPORTS ON VARIOUS ROUTES STATEWIDE

Town(s)/City of

BRIDGEPORT, WATERBURY, PLAINVILLE, NEWINGTON, MANCHESTER, GROTON

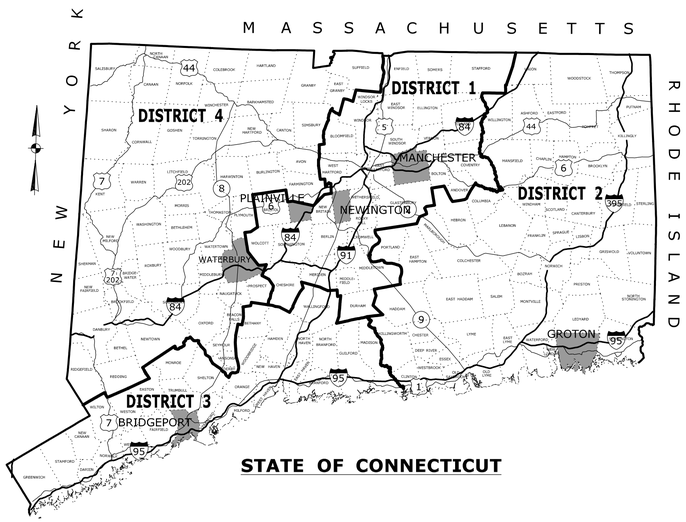

STATE OF CONNECTICUT

F.A.P. #	MAINTENANCE RESPONSIBILITY	PROJECT #
000R(424)	STATE OF CONNECTICUT	170-2773

GENERAL NOTES:

1. FEDERAL AID PROJECT NO. 000R(424)
2. F.H.W.A. REGION NO. 1
3. CONSTRUCTION SPECIFICATIONS:
   Connecticut Department of Transportation, Standard Specifications for Roads, Bridges and Incidental Construction, Form 816, dated 2004; Supplemental Specifications, dated July 2010; and Special Provisions

DISCLAIMER

IT IS THE RESPONSIBILITY OF EACH BIDDER AND ALL OTHER INTERESTED PARTIES TO OBTAIN ALL BIDDING RELATED INFORMATION AND DOCUMENTS FROM OFFICAL SOURCES WITHIN THE DEPARTMENT.

PERSONS AND/OR ENTITIES WHICH REPRODUCE AND/OR MAKE SUCH INFORMATION AVAILABLE BY ANY MEANS ARE NOT AUTHORIZED BY THE DEPARTMENT TO DO SO AND MAY BE LIABLE FOR CLAIMS RESULTING FROM THE DISSEMINATION OF UNOFFICAL, INCOMPLETE AND/OR INACCURATE INFORMATION.

CONSTRUCTION NOTES

1. THE RELATIVE LOCATION OF EACH SIGN ON OVERHEAD STRUCTURE IS SHOWN READING ALPHABETICALLY FROM LEFT TO RIGHT AS VIEWED BY TRAFFIC.
2. ALL SIGN FOUNDATIONS SHALL BE FIELD STAKED AND THE LOCATIONS APPROVED BY AN ENGINEER FROM THE DIVISION OF TRAFFIC ENGINEERING BEFORE CONCRETE IS POURED.
3. THE REMOVAL OF EXISTING SHEET ALUMINUM SIGNS AND POSTS WILL BE PAID FOR UNDER ITEM #1206023A "REMOVAL AND RELOCATION OF EXISTING SIGNS".
4. THE REMOVAL AND OR RELOCATION OF EXISTING OVERHEAD SIGNS WILL BE PAID FOR UNDER ITEM # 1206025A "REMOVAL AND RELOCATION OF EXISTING OVERHEAD SIGNS."
5. THE CONTRACTOR SHALL CLEAR AND TRIM AS DIRECTED BY THE ENGINEER TO PROVIDE ADEQUATE SIGHTLINE TO THE SIGNS. THIS WORK SHALL BE PAID FOR UNDER ITEM #0952001A SELECTIVE CLEARING AND THINNING.
6. WHEN A SIGN IS TO BE REPLACED THE EXISTING SIGN IS NOT TO BE REMOVED UNTIL THE REPLACEMENT SIGN IS INSTALLED.

LIST OF SUBSETS

SUBSET NO.	SUBSET TITLE	*SUBSET SHEET COUNT
01	GENERAL	4
02	REVISIONS	1
03	TRAFFIC	7
04	STRUCTURAL	31
05	HIGHWAY	3
	TRAFFIC STANDARD SHEETS	
	HIGHWAY STANDAND SHEETS	

*THE INITIAL SUBSET SHEET COUNT DOES NOT INCLUDE ADDENDUMS AND CHANGE ORDERS

SUBSET 01 - GENERAL

DRAWING TITLE	DRAWING NO.
TITLE SHEET	G-1
DETAILED ESTIMATE SHEET	EST-1
MISCELLANEOUS DETAILS	MDS-1
MISCELLANEOUS DETAILS	MDS-2

STANDARD CONVENTIONS

North Arrow W/No. Coor.
Edge Of Road
Concrete Pavement
Dirt Road
B.C.L.C.
Granite Curb
Guide Rail
Concrete Median Barrier
Bit. Walk
Conc. Sidewalk
Railroad Tracks
Grid Arrow
Limit Of Marsh
Stone Wall
Ledge Outcrop
Inland Wetland Limits
STATE LINE
Power Line
Swamp
Building
Transmission Tower
Chain Link Fence
Rustic Fence
Pipe Fence
Board Fence
Water Edge
Stream
Ditch
TOWN LINE
Riprap
Hedge Row
Tree Line
Shrub
Evergreen Tree
Deciduous Tree
Retaining Wall
Highway Line
Street Line
Property Line
Lot Line
Easement Line

THE DESIGN APPEARS TO CONFORM TO APPLICABLE CRITERIA. APPROVAL IS NOT TO BE CONSTRUED TO MEAN THAT ALL ASPECTS OF THE DESIGN HAVE BEEN PERSONALLY CHECKED BY THE UNDERSIGNED.

Charles S. Harlow
2011.11.21 15:31:38 -05'00'

SUBMITTED BY: TRANSPORTATION PRINCIPAL ENGINEER -

Timothy M. Wilson
2011.12.19 13:11:05 -05'00'

APPROVAL RECOMMENDED BY: MANAGER OF -

James H. Norman
2011.12.19 13:23:38 -05'00'

APPROVED BY: TRANSPORTATION ENGINEERING ADMINISTRATOR - JAMES H. NORMAN P.E.

Plans For

REPLACEMENT OF OVERHEAD SIGN SUPPORTS ON VARIOUS ROUTES STATEWIDE

Town(s)/City

BRIDGEPORT, WATERBURY, PLAINVILLE, NEWINGTON, MANCHESTER, GROTON

STATE PROJECT NO.

170-2773

DRAWING NO. **G-1**

SHEET NO. **01.01**

GENERAL ITEMS & TRAFFIC ENGINEERING ITEMS

PROJECT NO. 170-2773		ITEM NO. 0603802	0952001A	0969060A	0971001A	0975002	0976002	0978002	0980001	0981100	1130000	1131002A	1203109	1205207	1206013	1206025A	1207034A	1210103	1210104	1211001	1220013A	1806200
	ITEM DESCRIPTION	STRUCTURAL STEEL - SIGN SUPPORTS	SELECTIVE CLEARING AND THINNING	CONSTRUCTION FIELD OFFICE, SMALL	MAINTENANCE AND PROTECTION OF TRAFFIC	MOBILIZATION	BARRICADE WARNING LIGHTS - HIGH INTENSITY	TRAFFIC DRUM	CONSTRUCTION STAKING	42" TRAFFIC CONE	HIGH MOUNTED INTERNALLY ILLUMINATED FLASHING ARROW	REMOTE CONTROL CHANGEABLE MESSAGE SIGN	SIDE MOUNTED SIGN FOUNDATION	TYPE DE-7 DELINEATOR	REMOVAL OF EXISTING SIGNING	REMOVAL AND RELOCATION OF EXISTING OVERHEAD SIGNS	SIGN FACE - EXTRUDED ALUMINUM (TYPE IV RETROREFLECTIVE SHEETING)	6" WHITE EPOXY RESIN PAVEMENT MARKINGS	8" WHITE EPOXY RESIN PAVEMENT MARKINGS	REMOVAL OF PAVEMENT MARKINGS	CONSTRUCTION SIGNS - BRIGHT FLUORESCENT SHEETING	TYPE D PORTABLE IMPACT ATTENUATION SYSTEM
		CWT.	L.S.	MO.	L.S.	L.S.	DAY	EA.	L.S.	EA.	DAY	DAY	EA.	EA.	L.S.	L.S.	S.F.	L.F.	L.F.	S.F.	S.F.	HR.
P	SITE 1																439					
P	SITE 2																190					
P	SITE 3																300.5					
P	SITE 4																495					
P	SITE 5													12			312.5	312.5				
P	SITE 6	11											2				153					
P	SITE 7																218					
NP	SITE 8																241					
P	SITE 9																532	300	300	150		
	SUBTOTAL	11	L.S.	0	L.S.	L.S.	0	0	L.S.	0	0	0	2	12	L.S.	L.S.	2881	300	300	150	0	0
	UNASSIGNED	0	L.S.	19	L.S.	L.S.	300	40	L.S.	40	60	30	0	0	L.S.	L.S.	0	0	0	0	400	800
	TOTAL	11	L.S.	19	L.S.	L.S.	300	40	L.S.	40	60	30	2	12	L.S.	L.S.	2881	300	300	150	400	800

P = FEDERAL AID PARTICIPATING
NP= FEDERAL AID NON PARTICIPATING
=FOR INTERNAL USE ONLY
NOT A LEGAL DEFINITION

HIGHWAY ITEMS & STRUCTURE ITEMS

PROJECT NO. 170-2773		ITEM NO. 0202001	0202529	0209001	0212001	0406170	0406171	0406236	0601201	0602001	0602910A	0603768A	0822022	0904990A	0912503	0918001	0918011	0918200	0939001	0974001A	1002294A	1201801A	1201802A	1201804A	1202239A	1202999A	1801000	1801001	1801002	1801003	1801004	1807010	1807011	1807012	1807013	1807014
	ITEM DESCRIPTION	EARTH EXCAVATION	CUT BITUMINOUS CONCRETE PAVEMENT	FORMATION OF SUBGRADE	SUBBASE	HMA S1	HMA S0.5	MATERIAL FOR TACK COAT	CLASS "F" CONCRETE	DEFORMED STEEL BARS	DRILLING HOLES AND GROUTING DOWELS	STRUCTURAL STEEL	TEMPORARY PRECAST CONCRETE BARRIER CURB (24"X32")	METAL BRIDGE RAIL	REMOVE METAL BEAM RAIL	THREE-CABLE GUIDE RAILING (1 BEAM POST)	END ANCHORAGE - TYPE 1	THREE-CABLE GUIDE RAILING SYSTEM 2 (1 BEAM POST)	SWEEPING FOR DUST CONTROL	REMOVAL OF EXISTING MASONRY	SIGN SUPPORT FOUNDATION REPAIR	MONOTUBE BRIDGE SIGN STRUCTURE	4 CHORD TRUSS BRIDGE SIGN STRUCTURE	4 CHORD TRUSS CANTILEVER SIGN STRUCTURE	OVERHEAD TRUSS SIGN SUPPORT FOUNDATION	DRILLED SHAFT TRAFFIC STRUCTURE FOUNDATION	REPAIR OF IMPACT ATTENUATION SYSTEM TYPE A MODULE 200 LB.	REPAIR OF IMPACT ATTENUATION SYSTEM TYPE A MODULE 400 LB.	REPAIR OF IMPACT ATTENUATION SYSTEM TYPE A MODULE 700 LB.	REPAIR OF IMPACT ATTENUATION SYSTEM TYPE A MODULE 1400 LB.	REPAIR OF IMPACT ATTENUATION SYSTEM TYPE A MODULE 2100 LB.	TEMPORARY IMPACT ATTENUATION SYSTEM TYPE A MODULE 200 LB.	TEMPORARY IMPACT ATTENUATION SYSTEM TYPE A MODULE 400 LB.	TEMPORARY IMPACT ATTENUATION SYSTEM TYPE A MODULE 700 LB.	TEMPORARY IMPACT ATTENUATION SYSTEM TYPE A MODULE 1400 LB.	TEMPORARY IMPACT ATTENUATION SYSTEM TYPE A MODULE 2100 LB.
		C.Y.	L.F.	S.Y.	C.Y.	TON	TON	GAL.	C.Y.	LB.	EA.	LB.	L.F.	L.F.	L.F.	L.F.	L.F.	L.F.	HR.	C.Y.	EA.	EA.	EA.	EA.	EA.	EA.	EA.	EA.	EA.	EA.	EA.	EA.	EA.	EA.	EA.
P	SITE 1																					1				2										
P	SITE 2																							1		1										
P	SITE 3																					1				2										
P	SITE 4														180							1				2										
P	SITE 5	6	26	5	4	3	2	2	13	1800	52		240	38					3	9			1		1		2	1	3	4	4	2	1	3	4	4
P	SITE 6														340	216	2	200						1		1										
P	SITE 7																																			
NP	SITE 8											1200									1															
P	SITE 9																					1				2										
	SUBTOTAL	6	26	5	4	3	2	2	13	1800	52	1200	240	38	520	216	2	200	3	9	1	4	1	2	1	10	2	1	3	4	4	2	1	3	4	4
	UNASSIGNED	0	4	0	0	0	0	0	0	0	0	0	0	0	0	16	0	0	0	0	0	0	0	0	0	0	0	0	0	0	0	0	0	0	0	0
	TOTAL	6	30	5	4	3	2	2	13	1800	52	1200	240	38	520	232	2	200	3	9	1	4	1	2	1	10	2	1	3	4	4	2	1	3	4	4

REV.	DATE	REVISION DESCRIPTION	SHEET NO.
-	-	-	-
-	-	-	-
-	-	-	-
-	-	-	-
-	-	-	-
-	-	-	-

THE INFORMATION, INCLUDING ESTIMATED QUANTITIES OF WORK, SHOWN ON THESE SHEETS IS BASED ON LIMITED INVESTIGATIONS BY THE STATE AND IS IN NO WAY WARRANTED TO INDICATE THE CONDITIONS OF ACTUAL QUANTITIES OF WORK WHICH WILL BE REQUIRED.

Plotted: 11/21/2011

DESIGNER/DRAFTER: JAM
CHECKED BY: BFS

STATE OF CONNECTICUT
DEPARTMENT OF TRANSPORTATION

Filename: ...\TR_MSH_0170_2773_EST.dgn

SIGNATURE/BLOCK: OFFICE OF ENGINEERING
APPROVED BY: DATE:

PROJECT TITLE: REPLACEMENT OF OVERHEAD SIGN SUPPORTS ON VARIOUS ROUTES STATEWIDE

TOWN: VARIOUS

DRAWING TITLE: DETAILED ESTIMATE SHEET

PROJECT NO. 170-2773
DRAWING NO. EST-1
SHEET NO. 01.02

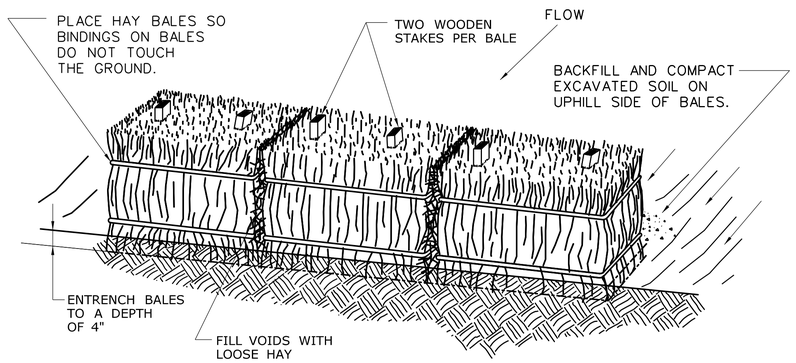

HAY BALE SYSTEM

GENERAL NOTES:

1. HAY BALES SHALL NOT BE USED IN A WATERCOURSE.
2. HAY BALES SHALL BE ENTRENCHED 4" AND TIGHTLY BUTTED TOPGETHER. REMOVE HEAVY BRUSH AND FILL ALL VOIDS WITH LOOSE HAY.
3. WOOD STAKES SHALL HAVE A MINIMUM CROSS-SECTION SIZE OF AT LEAST 1" x 1" AND MINIMUM LENGTH OF 4 FT.
4. CLEAN OUT ACCUMULATED SEDIMENT WHEN ONE-HALF (1/2) OF THE ORIGINAL HEIGHT OF THE HAY BALE FENCE, AS INSTALLED, BECOMES FILLED WITH SEDIMENT OR AS DIRECTED BY THE ENGINEER.
5. NOT TO BE USED IN THE VICINITY OF URBAN AND RESIDENTIAL AREAS.

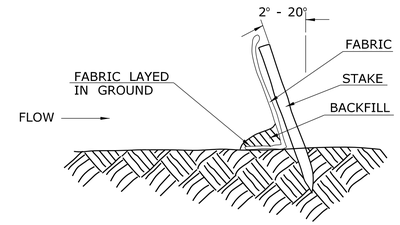

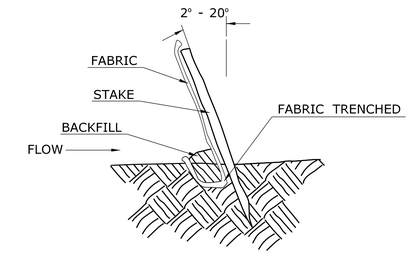

END VIEW

BACKFILLING GEOTEXTILE TOE

TRENCHING GEOTEXTILE TOE

GEOTEXTILE FENCE SYSTEM

GENERAL NOTES:

1. GEOTEXTILE FENCE SHOULD BE PLACED SO THE FENCE LEANS TOWARD THE SOURCE OF SEDIMENT.
2. MAXIMUM SPACING FOR WOODEN STAKES OR STEEL POSTS IS 10.0'.
3. WOOD STAKES SHALL HAVE A MINIMUM CROSS-SECTION SIZE OF 1.5" X 1.5" AND MINIMUM LENGTH OF 4 FT. STEEL POSTS SHALL BE AT LEAST 0.5 LB. PER FOOT WITH A MINIMUM LENGTH OF 4 FT.
4. WOODEN STAKES OR STEEL POSTS SHALL BE DRIVEN TO A MINIMUM OF 1' INTO THE GROUND.
5. 6" OF GEOTEXTILE SHALL BE BURIED BY BACKFILLING OR TRENCHING AND AT LEAST 2.5' IN HEIGHT OF GEOTEXTILE SHALL BE EXPOSED.
6. FABRIC SHALL BE JOINED ONLY AT A SUPPORT POST WITH A MINIMUM OF 6" OVERLAP AND SECURITY SEALED.
7. UPON RE-ESTABLISHMENT OF GROUND COVER IN DISTURBED AREAS AND WHEN DIRECTED BY THE ENGINEER, OR UPON FINAL INSPECTION FENCE AND ANY SEDIMENT SHALL BE REMOVED. AT NO TIME WILL THE FENCE REMAIN IN PLACE AFTER PROJECT COMPLETION.
8. GEOTEXTILE FENCE SHALL NOT BE USED IN A WATER COARSE.
9. ONLY GEOTEXTILE FROM THE DEPARTMENTS APPROVED PRODUCT LIST SHALL BE USED.
10. BACKFILLING OF GEOTEXTILE SHALL ONLY BE USED WHEN GROUND IS FROZEN OR WHERE OTHER OBSTRUCTIONS ARE ENCOUNTERED THAT PROHIBITE TRENCHING, IE, STUMPS OR ROCKS.
11. CLEAN OUT ACCUMULATION SEDIMENT WHEN ONE-HALF (1/2) OF THE ORIGINAL HEIGHT OF THE GEOTEXTILE FENCE, AS INSTALLED , BECOMES FILLED WITH SEDIMENT OR AS DIRECTED BY THE ENGINEER.

NOTE: THIS SHEET INCLUDED AS A GENERAL GUIDE FOR SEDIMENTATION AND EROSION CONTROL MEASURES. THE CONTRACTOR IS TO SUBMIT A PLAN AND FOLLOW THE BEST MANAGEMENT PRACTICES AS SET FORTH IN THE SPECIFICATIONS.

ALL SEDIMENTATION AND EROSION CONTROL AND RESTORATION OF SURROUNDING AREAS INCLUDING SEEDING IS CONSIDERED INCIDENTAL TO THE INSTALLATION OF SIGNS AND RELATED WORK AND IS INCLUDED IN THE GENERAL COST OF THE WORK.

REVISED: 12/10/07

REV.	DATE	REVISION DESCRIPTION	SHEET NO.
-	-	-	-
-	-	-	-
-	-	-	-
-	-	-	-
-	-	-	-
-	-	-	-

THE INFORMATION, INCLUDING ESTIMATED QUANTITIES OF WORK, SHOWN ON THESE SHEETS IS BASED ON LIMITED INVESTIGATIONS BY THE STATE AND IS IN NO WAY WARRANTED TO INDICATE THE CONDITIONS OF ACTUAL QUANTITIES OF WORK WHICH WILL BE REQUIRED.

Plotted Date: 11/21/2011

DESIGNER/DRAFTER: JAM
CHECKED BY: BFS
NTS

STATE OF CONNECTICUT
DEPARTMENT OF TRANSPORTATION

Filename: ...\TR_MSH_0170_2773_MDS-1_Erosion1_2007.dgn

SIGNATURE/BLOCK: OFFICE OF ENGINEERING
APPROVED BY: DATE:

PROJECT TITLE: REPLACEMENT OF OVERHEAD SIGN SUPPORTS ON VARIOUS ROUTES STATEWIDE

TOWN: VARIOUS

DRAWING TITLE: MISCELLANEOUS CONNECTICUT DETAIL SEDIMENTATION CONTROL SYSTEM

PROJECT NO. 170-2773
DRAWING NO. MDS-1
SHEET NO. 01.03

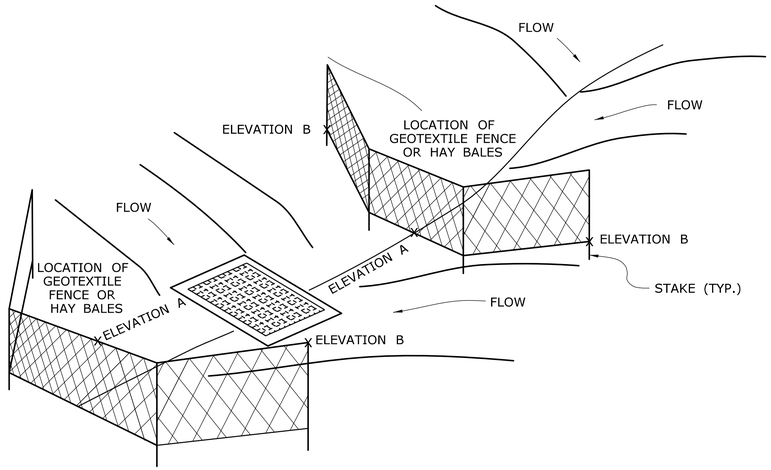

TREATMENT FOR A CATCH BASIN ON A SLOPE

(SEE NOTE 4)

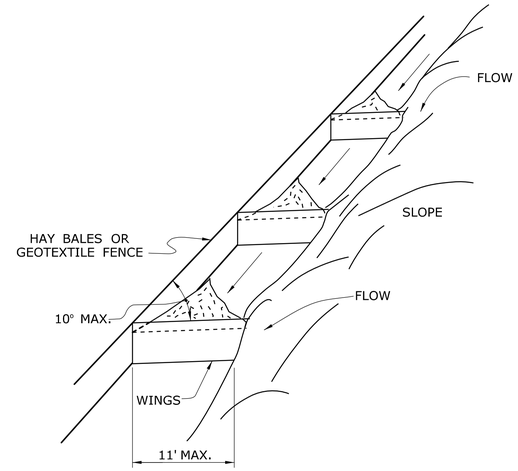

TREATMENT AT TOE OF SLOPE

(SEE NOTE 3)

GENERAL NOTES:

1. THE CONTRACTOR SHALL MAINTAIN THE EARTHEN BERM AS DIRECTED BY THE ENGINEER.
2. WHEN USING A SEDIMENTATION CONTROL SYSTEM ALONG THE TOE OF SLOPE, ADD WINGS TO PREVENT SEDIMENT FROM MOVING ALONG THE FENCE AND OFF THE SITE. MINIMUM SPACING FOR WINGS IS 25'.
3. CATCH BASIN ON SLOPE SHOULD NOT BE RINGED. THE SPACING OF SEDIMENTATION CONTROL SYSTEM SHALL VARY WITH SLOPE.
4. ELEVATION B = A + 12" MIN.

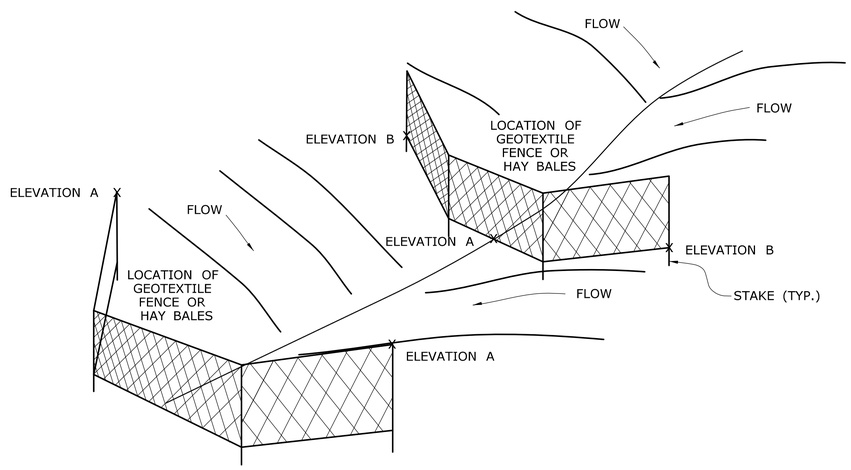

CHECK DAM

(SEE NOTE 4)

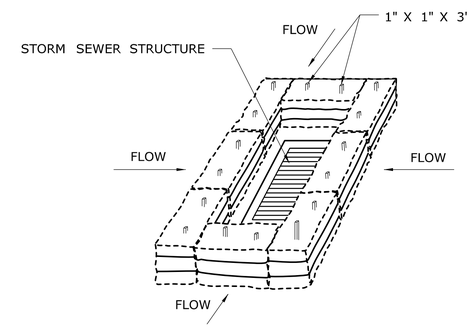

HAY BALE AT CATCH BASIN

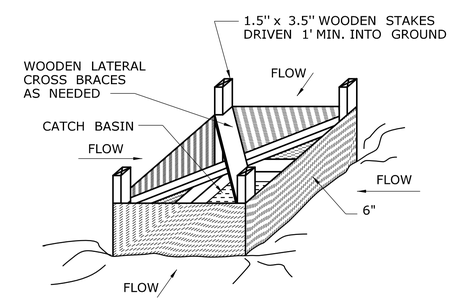

GEOTEXTILE FENCE AT CATCH BASIN

TREATMENT FOR A CATCH BASIN IN A DEPRESSION

NOTE: THIS SHEET INCLUDED AS A GENERAL GUIDE FOR SEDIMENTATION AND EROSION CONTROL MEASURES. THE CONTRACTOR IS TO SUBMIT A PLAN AND FOLLOW THE BEST MANAGEMENT PRACTICES AS SET FORTH IN THE SPECIFICATIONS.

ALL SEDIMENTATION AND EROSION CONTROL AND RESTORATION OF SURROUNDING AREAS INCLUDING SEEDING IS CONSIDERED INCIDENTAL TO THE INSTALLATION OF SIGNS AND RELATED WORK AND IS INCLUDED IN THE GENERAL COST OF THE WORK.

REVISED 12/12/07

REV.	DATE	REVISION DESCRIPTION	SHEET NO.

THE INFORMATION, INCLUDING ESTIMATED QUANTITIES OF WORK, SHOWN ON THESE SHEETS IS BASED ON LIMITED INVESTIGATIONS BY THE STATE AND IS IN NO WAY WARRANTED TO INDICATE THE CONDITIONS OF ACTUAL QUANTITIES OF WORK WHICH WILL BE REQUIRED.

Plotted Date: 11/21/2011

DESIGNER/DRAFTER: JAM
CHECKED BY: BFS
NTS

STATE OF CONNECTICUT
DEPARTMENT OF TRANSPORTATION

Filename: ...\TR_MSH_0170_2773_MDS-2_Erosion2_2007.dgn

SIGNATURE/BLOCK: OFFICE OF ENGINEERING
APPROVED BY: DATE:

PROJECT TITLE: REPLACEMENT OF OVERHEAD SIGN SUPPORTS ON VARIOUS ROUTES STATEWIDE

TOWN: VARIOUS

DRAWING TITLE: MISCELLANEOUS CONNECTICUT DETAIL SEDIMENTATION CONTROL TREATMENTS

PROJECT NO. 170-2773
DRAWING NO. MDS-2
SHEET NO. 01.04